Towbar: AK4603
For ALKO CHASSIS MOTORHOMES
Revision: 0 **Type Approval Number: E11*55R01/07*12080*00**

PCT AUTOMOTIVE
MADE IN SHEFFIELD
Towing Masters
Since 1926
Towbars | Towing Electrics
Commercial Vehicle Accessories

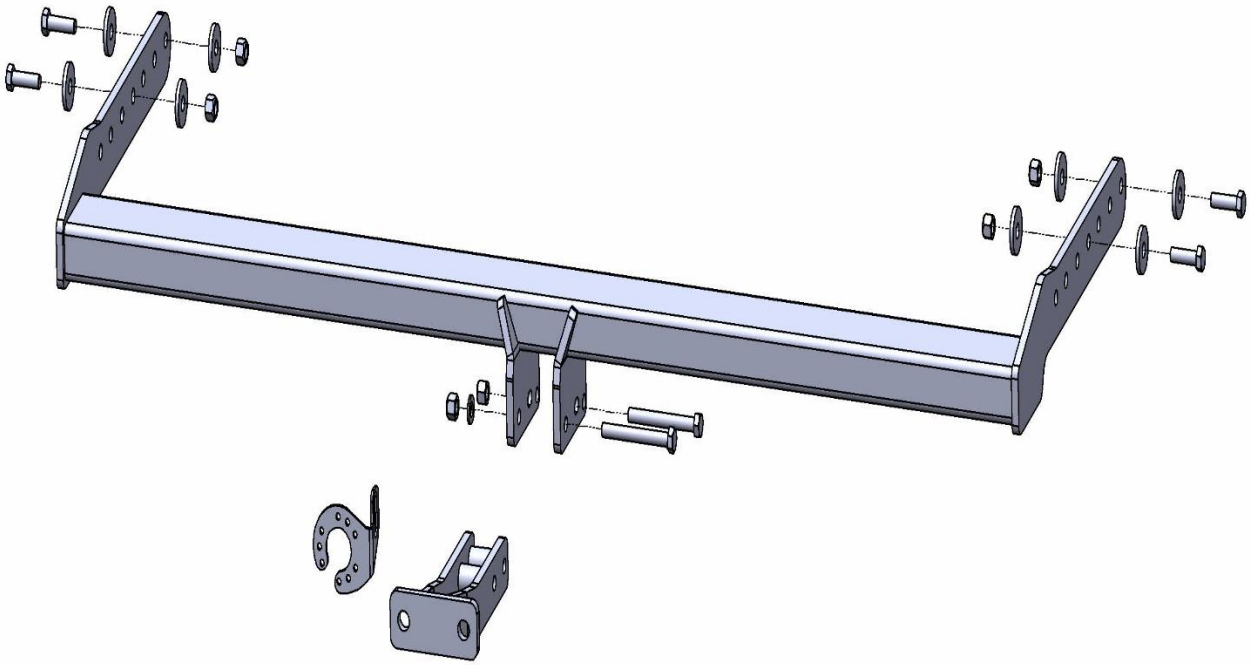

PCT AUTOMOTIVE
MADE IN SHEFFIELD
Towing Masters
Since 1926
Towbars | Towing Electrics
Commercial Vehicle Accessories

TOWBAR: AK4603
INSTALLATION INSTRUCTION

Towbar: AK4603
For ALKO CHASSIS MOTORHOMES
Revision: 0 **Type Approval Number: E11*55R01/07*12080*00**

PCT AUTOMOTIVE
Towing Masters
Since 1926
Towbars | Towing Electrics
Commercial Vehicle Accessories
MADE IN SHEFFIELD

PARTS LIST

Item	Quantity	Description
A	1	Towbar
B	1	Flange Neck
TB	1	Towball Coupling – 50mm
TC	1	Towball Boot Cover
EP	1	Electrical Bracket

BOLT PACK

Item	Quantity	Description
C	2	M16 x 55 Coupling Bolts & M16 Nyloc Nuts
D	4	M12 x 40 Bolts (10.9 Grade) & M12 Nyloc Nuts
E	2	M12 x 100 Bolts & Nyloc Nuts
F	8	M12 Washer - 40mm O/D
G	1	M12 Washer - 23mm O/D
CAP-M12	4	M12 Bolt Covers

INSTALLATION NOTES

- **Always read the instructions thoroughly before commencing installation.**
- **Check that the towbar is suitable for your make & model.**
- **Due to variances in vehicle specification compatibility cannot be guaranteed.**
- **Leave all components loose until assembled unless instructed in the installation instructions. This will ensure any vehicle variances are overcome.**
- **Recommended Torque Settings:**
  - **M12 x 1.75 Pitch: 102Nm, M14 x 2.0 Pitch: 141Nm, M16 x 2.0 Pitch: 252Nm**
- **The towing limits & static nose load limit stated by the vehicle manufacturer must never be exceeded.**
- **Maintenance should be carried our periodically. This should include, but not be limited to, bolt tightness, corrosion to the towbar and/or mounting areas, coated finish etc.**
- **Full Terms & Conditions are available upon request.**

Towbar: AK4603
For ALKO CHASSIS MOTORHOMES
Revision: 0 **Type Approval Number: E11*55R01/07*12080*00**

PCT AUTOMOTIVE
Towing Masters
Since 1926
Towbars | Towing Electrics
Commercial Vehicle Accessories
MADE IN SHEFFIELD

INSTALLATION PROCEDURE

1. Attach crossbar ***A*** to the desired mounting point on the chassis using bolts ***D*** with washers ***F***.
2. Attach flange neck ***B*** with electrical bracket ***EP*** to crossbar ***A*** using bolts ***E*** and washer ***G***.
3. Attach towball to flange neck ***B*** using bolts ***C***. Tighten all bolts

Towbar: AK4603

For ALKO CHASSIS MOTORHOMES

Revision: 0 **Type Approval Number: E11*55R01/07*12080*00**

PCT AUTOMOTIVE

Towing Masters
Since 1926

Towbars | Towing Electrics
Commercial Vehicle Accessories

MADE IN SHEFFIELD

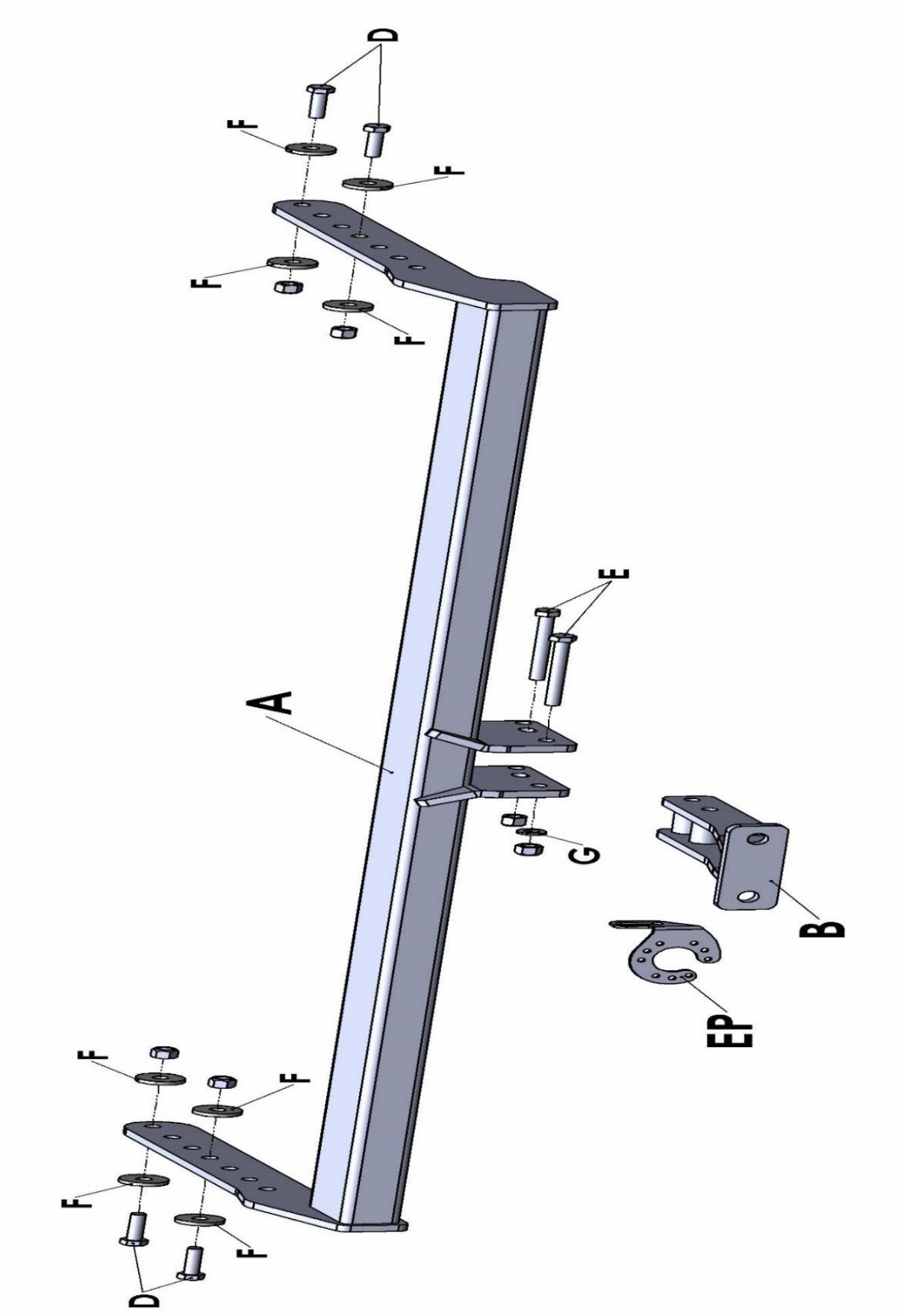

Towbar: AK4603

For ALKO CHASSIS MOTORHOMES

Revision: 0 **Type Approval Number: E11*55R01/07*12080*00**

PCT AUTOMOTIVE

MADE IN SHEFFIELD

Towing Masters
Since 1926

Towbars | Towing Electrics
Commercial Vehicle Accessories

Towbar: AK4603

For ALKO CHASSIS MOTORHOMES

Revision: 0 **Type Approval Number: E11*55R01/07*12080*00**

PCT AUTOMOTIVE

MADE IN SHEFFIELD

Towing Masters
Since 1926

Towbars | Towing Electrics
Commercial Vehicle Accessories